INSTALLATION & MAINTENANCE INSTRUCTIONS

AVK KNIFE GATE VALVES

SERIES 702

1. INTRODUCTION

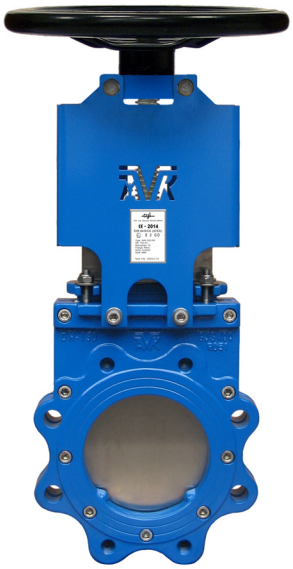

The AVK knife gate valve is a bidirectional on-off valve that ensures a drop-tight closure.

The standard valve has a ductile iron body and is available with seat in nitrile, FKM, PTFE, EPDM, natural rubber and polyurethane depending on the service medium and temperature. It is coated with 100-150 µm UV resistant polyester on the body and 100-150 µm plasticoat PPA 571 Aqua on the yoke.

The valve is available in different versions: 1) handwheel operated, 2) with quick closing lever, 3) with ISO top flange, 4) with square cap or 5) fitted
with either electric or pneumatic actuators. The valve design permits a simple and rapid change of actuator.

Its light weight and short face to face dimension allows easy installation and results in low piping stress and support loads. It is a full-bore valve, permitting easy passage of liquid of any viscosity. The AVK knife gate valve does not have body cavities below the gate where the medium can accumulate. For particulate or abrasive media, gate scrapers and deflector cones can be provided.

AVK soft-seated knife gate valves may be limited by their soft seats, body, and gate materials to certain maximum working temperatures. When ordering, it is important to state expected maximum working pressure, temperature, medium and expected operation frequency to ensure correct valve configuration.

2. APPLICATION AND TEMPERATURE RANGE OF AVK SEALING MATERIALS

EPDM: Advantages: excellent resistance to heat, ozone, and sunlight, very good flexibility at low temperature, good resistance to alkalis, acids, and oxygenated solvents. Limitations: poor resistance to oil, gasoline, and hydrocarbon-based solvents. The working temperature range for EPDM is between -30 ºC and +90 ºC.

NBR-NITRIL: Advantages: very good resistance to oil, gasoline, alkalis, and acids, good resistance to hydrocarbon-based solvents. Limitations: inferior resistance to ozone and oxygenated solvents, it should not be used for high polar solvents (acetones and ketones). The working temperature range for NBR- NITRIL is between -30 ºC and +80 ºC.

EPDM-POTABLE: WRAS approved seat for potable water (FDA conformity). The working temperature range for EPDM-POTABLE is between -30 ºC and +90 ºC.

FKM: Advantages: very good resistance to ozone and sunlight, compatible with a broad spectrum of chemicals and salt solutions and may be used on bleached paper lines. Good resistance to alkalis and acids. Limitations: not suitable for steam or hot water service. The working temperature range for FKM is between -40 ºC and +180 ºC.

POLYURETHANE: Advantages: very resistant towards abrasion and tear, outstanding resistance to oxygen, ozone, sunlight, and general weather. The working temperature range for POLYURETHANE is between -10 ºC and + 80 ºC.

PTFE (TFE or Teflon): Advantages: best chemical resistance of all plastics. It has excellent thermal and electrical insulation properties. The mechanical properties of PTFE are low, compared to other engineering plastics, but its properties remain at useful levels over a great range (-10 ºC / +200ºC, depending on application).

WARNING: Knife Gate Valves are not suitable for steam or water at above temperature of 80ºC

3. OPERATING PRESSURE

TP: Test pressure in bar
WP: Eorking pressure in bar

Hydraulic test according to EN 12266-1.

Test fluid: Water	Seat (closed valve): 1.1 x PN
Minimum testing time: 10 min	Body (open valve): 1.5 x PN

© 2024 AVK Group A/S - AVK INTERNATIONAL A/S, Bizonvej 1, DK-8464 Galten - www.avkvalves.eu

DN	50	65	80	100	125	150	200	250	300	350	400	450	500	600
TP	15	15	15	15	15	15	15	15	15	9	9	6	6	6
WP	10	10	10	10	10	10	10	10	10	6	6	4	4	4

DN	700	800	900	1000	1200	1400	1500	1600
TP	4.5	6	4.5	3	3	1	1	1
WP	3	4	3	2	2	1	1	1

4. INSTALLATION

4.1 Recommended gasket sizes and pressure rating.

Table no. 1. Gasket sizes

Nominal size DN	Pressure Class PN	Dimensions mm D1 x D2 x S
50	10-16	Ø50 x Ø107 x 4
65	10-16	Ø65 x Ø127 x 4
80	10-16	Ø80 x Ø142 x 4
100	10-16	Ø100 x Ø162 x 5
125	10-16	Ø125 x Ø192 x 5
150	10-16	Ø150 x Ø218 x 5
200	10	Ø200 x Ø273 x 6
250	10	Ø250 x Ø330 x 6
300	10	Ø300 x Ø378 x 7
350	10	Ø350 x Ø438 x 7
400	10	Ø400 x Ø490 x 7
450	10	Ø450 x Ø540 x 7
500	10	Ø500 x Ø595 x 7
600	10	Ø600 x Ø695 x 7
700	10	Ø700 X Ø810 X 7
800	10	Ø800 X Ø916 X 7
900	10	Ø900 X Ø1015 X 7
1000	10	Ø1000 X Ø1122 X 7
1200	10	Ø1200 X Ø1339 X 7
1400	10	Ø1400 X Ø1545 X 7
1500	10	Ø1500 X Ø1655 X 7
1600	10	Ø1600 X Ø 1769 X 7

D1 = Inside diameter
D2 = Outside diameter
S = Seal thickness

4.2 The AVK knife gate valve is bidirectional, meaning that it can be installed disregarding the flow direction. However, if a deflector cone for abrasive media is supplied, it must be fitted upstream of the valve to function correctly. If the valve is supplied with a diaphragm disk for regulation, the diaphragm disk must be installed downstream.

4.3 The AVK knife gate valve maintains its drop-tight seal through compression of the U-shaped soft seat and the upper packing gland. The stem threads must be lubricated with a waterproof neutral grease to maintain the correct closing torque.
We recommend using a silicone multi usage grease from Loctite – (8104) or Molikote 111 Compound.
For U-seat and gate lubrication it is recommended to apply and spread white vaseline multi spray from Kroon Oil.

For handwheel operated valves it is important to note that if a maximum manual operating torque is specified by the end user, AVK must be informed, as it could be necessary to offer a gearbox. Valves that are to be electrically actuated must have the stem lubricated as stated above. Failure to do so may cause the actuator to stall or fail. To avoid any problem, AVK recommends that heavy service valves should have the actuators fitted at our factory. The stem lubrication must be checked every three months and maintained at an adequate level.

4.4 When the valve is first put into service, the packing gland bolts at the upper part of the body should be checked. The packing gland bolts are set to an average tightness from the factory. However, different service pressures require different degrees of tightness. If the medium is seen to be leaking from the upper part through the packing gland, tighten the packing gland bolts according to table no. 2 below:

Table no. 2. Packing gland average tightening torques for maximum WP

DN mm	AVERAGE TORQUE [Nm] min.
150 - 400	15
450 - 600	18
700 - 800	25
900 - 1200	31

Illustration no. 1
Packing gland bolts

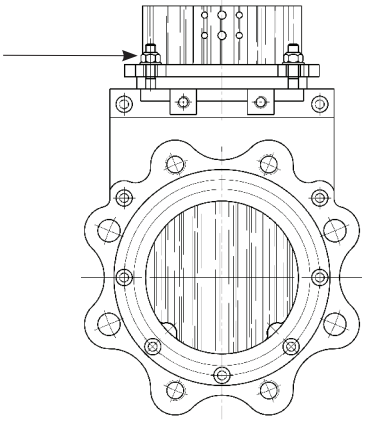

4.5 Once the valve is comissioned in the pipeline, grease must be applied to the stem to ensure easy operation.

4.6Valves operated through electric actuator (especially modulating actuators) must be inspected and lubricated every 2 weeks. Furthermore, the grease nipple at the actuator and the threaded stem should be checked and lubricated periodically. The operation and maintenance instructions of the electric actuator manufacturer should be followed by the customer. Failure to comply with these recommendations may cause lack of performance and valve failure.

5. OPERATION
5.1 MANUAL (HANDWHEEL OR SQUARE CAP) OPERATED VALVES

- To open, turn the handwheel in anti-clockwise direction.
- To close, turn handwheel in clockwise direction. Valve must be tightened firmly to ensure a drop-tight seal.

Table no. 3. No. of turns for manually operated valves

DN	Number of turns	DN	Number of turns
50	14	250	51
65	17,5	300	61
80	21	350	71
100	26	400	81
125	32,5	450	65
150	31	500	72
200	41	600	86

Table no. 3A. No. of turns to open/close after gearbox

DN	Number of turns
700	355
800	410
900	456
1000	452
1200	538

5.2 PNEUMATIC OPERATED VALVES

- To open the pneumatic cylinder actuated valve, apply air pressure to the lower side BSP inlet of the actuator piston. The air must always be cleaned, filtered, dried and lubricated.
- To close the pneumatic cylinder actuated valve, make sure that you have at least 87 PSI (6 BAR) at the upper side BSP inlet cylinder head to ensure force enough for a bubble tight seal. The air must always be cleaned, filtered and lubricated.

Double acting pneumatic act. capacity in liters of air at atmospheric pressure

Table no. 4. Air pressure at min. 6 bar - max. 10 bar

DN	Ø cylinder	Capacity in litres
50	80	0,36
65	80	0,43
80	100	0,83
100	100	0,96
125	125	1,87
150	160	3,67
200	190	6,68
250	190	8,05
300	190	9,5
350	250	19,01
400	250	21,52
450	300	34,13
500	300	38,14
600	300	45,17
700	350	71,64
800	350	81,02
900	350	92,3
1000	350	101,5

Valves fitted with pneumatic actuators have BSP threaded air input and output ports. Tight shut-off of the valve will be ensured by having at least an 87 psi (6 bar) air supply at the actuator. We recommend following the instructions from the actuator manufacturer regarding maintenance and to use only air that is filtered, dry and lubricated. The valve is designed to be installed with the cylinder in a vertical position.

All pneumatic actuators, single or double acting, larger than Ø250 must be supported externally due to the heavy weight. If, for any reason, the valve must be installed in any other position than vertically, the pneumatic actuator must be well supported to avoid misalignments of the actuator, resulting in poor performance of the valve.

WARNING: The pressure applied to the actuator should be 6 bar or more. If not, there is risk that the valve will open or close incompletely.

5.3 ELECTRIC OPERATED VALVES

AVK valves operated through electric actuators should be installed in vertical position. If, for any reason, the valve has to be installed in any other position than the one advised by AVK, the electric actuator has to be well supported in order to avoid misalignment of the electric actuator and, consequently, a poor performance of the valve.

NOTE: Electric actuated valves must be inspected and lubricated every month. Further, the grease nipple at ISO flange and the threaded spindle should be checked and lubricated periodically (on average once every 3 months).

TO OPERATE MOTOR-ACTUATED VALVES, FOLLOW INSTRUCTIONS FROM ACTUATOR MANUFACTURER.

Adjustment of the electric actuator should follow instructions from manufacturer.

Closing direction: Torque switch should be adjusted to the closing torque as listed in table 5. The limit switch should be set with the knife/gate in almost closed position (5-10 mm from where there is contact between the knife/gate and the bottom sealing).

Opening direction: Torque switch should be set to 10% above the closing torque. The limit switch should be set with the valve in almost open position (turn the handwheel from fully open one turn towards closed).

Table no. 5. Selection of AUMA actuator for on/aff duty

AUMA ACTUATOR SPECIFICATIONS - ON-OFF

Valve diameter nominal	Work. pres.	Torque		Stem thread	Top flange size	No of turns	Auma on-off S2-15min	Advised speed	Power con-sump.	Time to close/ open	AUMA coupling type		weight SA
		min	max										
DN mm	bar	Nm	Nm		ISO 5210		3 Phases 400V-50Hz	rpm	kW	sek	Rising stem	Non-rising stem	kg
50	10	8	16	20 x 4	F-10	14	SA 07.2	45	0,10	19	A	B3	25
65	10	10	17	20 x 4	F-10	17	SA 07.2	45	0,10	23	A	B3	25
80	10	12	19	20 x 4	F-10	21	SA 07.2	45	0,10	28	A	B3	25
100	10	15	22	20 x 4	F-10	26	SA 07.2	45	0,10	35	A	B3	25
125	10	17	24	20 x 4	F-10	33	SA 07.2	45	0,10	44	A	B3	25
150	10	25	50	24 x 5	F-10	31	SA 07.6	45	0,20	41	A	B3	27
200	10	27	53	24 x 5	F-10	41	SA 07.6	45	0,20	55	A	B3	27
250	10	50	69	24 x 5	F-10	51	SA 10.2	45	0,40	68	A	B3	30
300	10	63	84	28 x 5	F-10	61	SA 10.2	45	0,40	81	A	B3	30
350	6	78	102	28 x 5	F-10	71	SA 10.2	45	0,40	95	A	B3	30
400	6	90	110	28 x 5	F-10	81	SA 10.2	45	0,40	108	A	B3	30
450	4	215	252	40 x 7	F-14	65	SA 14.6	45	1,60	87	A	B3	64
500	4	223	260	40 x 7	F-14	72	SA 14.6	45	1,60	96	A	B3	64
600	4	249	290	40 x 7	F-14	86	SA 14.6	45	1,60	115	A	B3	64
700	3	330	388	50 x 8	F-14	89	SA 14.6	45	1,60	119	A	B3	64
800	4	420	542	50 x 8	F-16	102	SA 16.2	45	1,50	278	A	B3	86
900	2	512	658	50 x 8	F-16	114	SA 16.2	45	1,50	311	A	B3	86
1000	2	620	810	60 x 9	F-16	113	SA 16.2	45	1,50	308	A	B3	86
1200	2	850	978	60 x 9	F-16	136	SA 16.2	45	4,00	371	A	B3	86

Table no. 6. Selection of AUMA actuator for regulating duty

AUMA ACTUATOR SPECIFICATIONS - REGULATION

Valve diameter nominal	Work. pres.	Torque		Stem thread	Top flange size	No of turns	Auma type SAR-modul S4-25%	Advised speed	Power con-sump.	Time to close/ open	AUMA		
		min	max								coupling type	coupling type	weight SA
DN mm	bar	Nm	Nm		ISO 5210		3 Phases 400V-50Hz	rpm	kW	s	Rising stem	Non-rising stem	kg
50	10	8	16	20 x 4	F-10	14	SAR 07.6	45	0,2	19	A	B3	21
65	10	10	17	20 x 4	F-10	17	SAR 07.6	45	0,2	23	A	B3	21
80	10	12	19	20 x 4	F-10	21	SAR 07.6	45	0,2	28	A	B3	21
100	10	15	22	20 x 4	F-10	26	SAR 07.6	45	0,2	35	A	B3	21
125	10	17	24	20 x 4	F-10	33	SAR 07.6	45	0,2	44	A	B3	21
150	10	25	50	24 x 5	F-10	31	SAR 10.2	45	0,4	41	A	B3	25
200	10	27	53	24 x 5	F-10	41	SAR 10.2	45	0,4	55	A	B3	25
250	10	50	69	24 x 5	F-14	51	SAR 14.2	45	0,75	68	A	B3	48
300	10	63	84	28 x 5	F-14	61	SAR 14.2	45	0,75	81	A	B3	48
350	6	78	102	28 x 5	F-14	71	SAR 14.2	45	0,75	95	A	B3	48
400	6	90	110	28 x 5	F-14	81	SAR 14.2	45	0,75	108	A	B3	48
450	4	215	252	40 x 7	F-16	65	SAR 16.2	45	3	87	A	B3	82
500	4	223	260	40 x 7	F-16	72	SAR 16.2	45	3	96	A	B3	82
600	4	249	290	40 x 7	F-16	86	SAR 16.2	45	3	115	A	B3	82
700	4	330	388	50 x 8	F-25	89	SAR 25.1	45	3	485	A	*	82
800	2	420	542	50 x 8	F-25	102	SAR 25.1	22	3	556	A	*	100
900	2	512	658	50 x 8	F-25	114	SAR 25.1	22	3	622	A	*	100
1000	1	580	810	60 x 9	F-25	113	SAR 25.1	22	3	616	A	*	100

* Above DN600 modulation duty only with rising stem

5.4 HYDRAULIC OPERATED VALVES

Valves fitted with oil hydraulic actuators have BSP threaded oil input and oil ports. Tight shut-off of the valve will be ensured by having a minimum of 1.160 psi (80 bar) and a maximum of 1.740 psi. (120 bar) oil supply at the actuator.
- To open the hydraulic cylinder valve, apply oil pressure to the lower side BSP inlet of the actuator.
- To close the hydraulic cylinder actuated valve, apply oil pressure to the upper side BSP inlet of the actuator,

6. MAINTENANCE

All elastomers degrade, and they will, to some extent, show signs of use and tear after a certain period of time. This is also the case with the elastomers/rubber types we use. However, if the materials are used/handled in accordance with the given recommendations, the level of maintenance will be minimal, and they will have a relatively long lifespan.

WARNING: Relieve pipeline pressure prior to loosening gland nuts or flange bolts. Failure to relieve pipeline pressure could result in personal injury and/or damage to the equipment.

AVK KNIFE GATE VALVES

SERIES 702

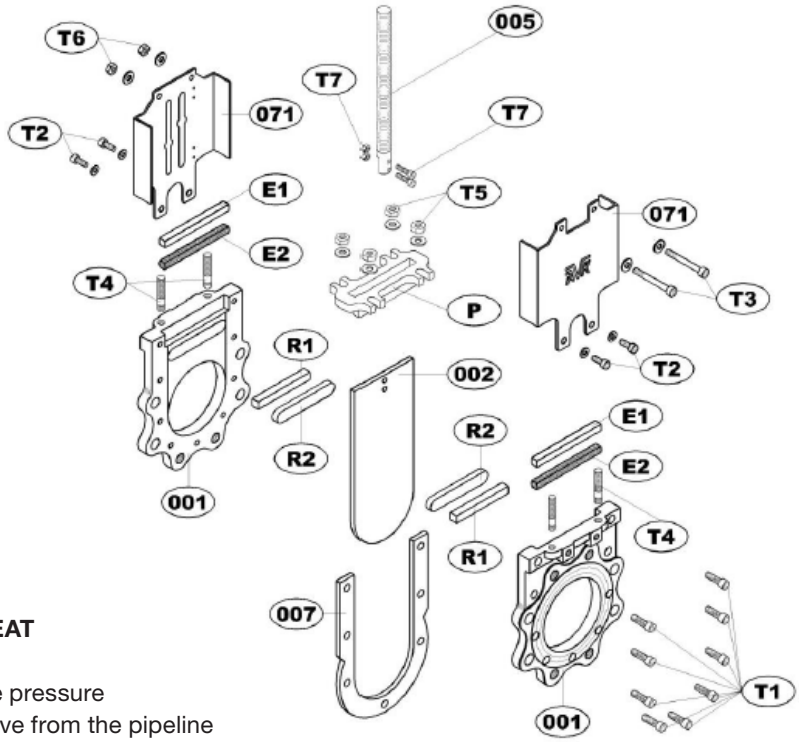

To change the U-SEAT

1. Relieve pipeline pressure
2. Remove the valve from the pipeline
3. Remove the bolts fixing the yoke-plates (T2 and T3) to the body and upper platform
4. Remove the plates (071)
5. Remove the gland nuts (T5) and packing gland (P)
6. Remove the packing material from the packing chamber (E1 and E2)
7. Disconnect the spindle (005) from the gate (002) by removing the 2 screws and nuts (T7)
8. Release the body bolts which secure the two half bodies (T1)
9. Separate the two half bodies (001)
10. Remove the U-seat (007)
11. Clean the inside surface of the body and install the new U-seat (007)
12. Reassemble the two half bodies (001) and tight the body bolts (T1), acc. to table below.

Table no. 7. Torque for tighting body bolts

DN	Torque (Nm)
50-125	40
150-400	50
450-600	60
700-800	75
900-1000	85
1200	95

13. Connect the top part of the valve to the gate (002) and body (001)
14. In case the valve has scraper, you have to remove parts R1 and R2 and replace them for new ones.

IMPORTANT: Once leakage has stopped, tighten the packing gland bolts according to table no. 7 above to ensure the correct torque. Over-tightening the gland bolts will result in higher valve operating torques and premature packing failure.

7. STORAGE OF RUBBER PRODUCTS

While the various types of rubber possess different degrees of resistance to the deteriorating influences that may be present during storage, the same general recommendations apply to all vulcanized rubber products. They should be stored in a cool, dry, dark place away from steam pipes, sunlight, etc.