AVK Supa Maxi™
universal tensile couplings



Patented SupaGrip™ sealing support system for maximum safety in the network

AVK INTERNATIONAL A/S

Excellence in quality throughout the process

From design to finished product

AVK products are manufactured in modern factories using high technology, computerised machining centres and robots to ensure precision and uniformity.

The overall framework for quality from development to distribution is our extensive quality assurance system certified to ISO 9001.

Optimum corrosion protection for maximum durability

AVK products meet the GSK requirements and conform to other international standards of effective corrosion protection. By virtue of our GSK membership (Gütegemeinschaft Schwerer Korrosionsschutz), our entire coating process complies with RAL-GZ 662 guidelines and is being monitored and approved twice a year by the independent testing institute MPA-Hannover.

The step-by-step process with automatic monitoring of time, temperature, coating thickness etc. ensures maximum durability of the coating.





RAL GÜTEZEICHEN
SCHWERER KORROSIONSSCHUTZ VON ARMATUREN UND FORMSTÜCKEN
RAL

AVK produces quality valves, hydrants and accessories for:

Water Supply | **Sewage Treatment** | **Gas Supply** | **Fire Protection**

AVK sets a new standard with Supa Maxi™ universal tensile couplings



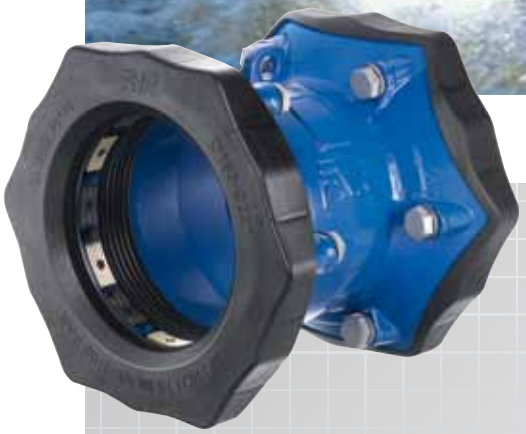

DESIGN PROTECTION PENDING

Supa Maxi™ is the latest addition to AVK's range of Supa® couplings and comprises a complete range of large tolerance universal and tensile straight couplings, step couplings, flange adaptors, end caps and transition couplings to EN 14525 for water, gas and wastewater applications.
Supa Maxi™ sets a new standard with its unique features:

- 10 couplings/adaptors cover DN 50-300
- Fully universal and tensile on all pipe materials
- Patented SupaGrip™ sealing support system with flexible bracket
- PN 16 in all dimensions for water (WP -0,9 to 16 bar), PN 10 for gas
- ±4° (8°) angular deflection on each side, even at max tolerance
- The pipe will not move inwards when tightening
- Permanent protection caps protect during handling and installation
- Bolts are tightened on the bolt head from the sleeve side
- No re-tightening of bolts
- Lifting eye in DN 100-300
- Fusion bonded epoxy coating to DIN 30677-2, GSK approved
- Gasket of EPDM approved for drinking water/NBR approved for gas
- Temperature range -30°C to +70°C



Straight coupling



Flange adaptor



Step coupling



End cap



Transition coupling

For PE, uPVC, Bi-PVC, cast iron, ductile iron, steel, stainless steel, CFW GRP and AC pipes

Patented SupaGrip™ sealing support system with flexible bracket







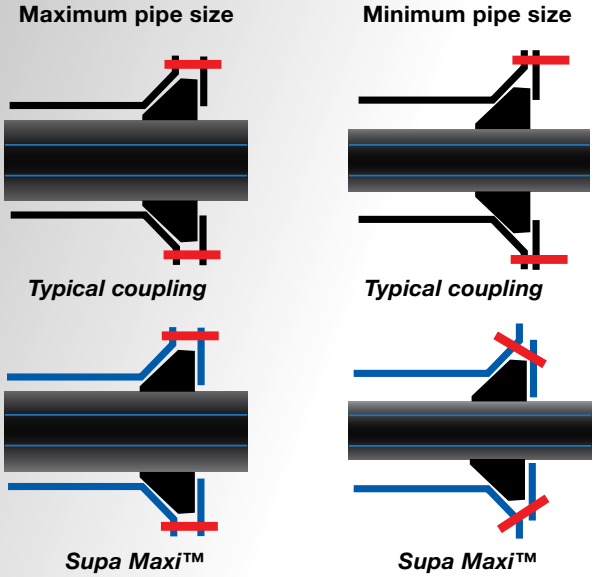





The flexible bracket with separate bracket segments and radially moving bolts is designed to contract and give full support to the gasket at any given pipe dimension when tightening the bolts.

The bolts go through radially slotted holes in the cone shaped sleeve and through holes in the bracket segments.

Superior tightness and tensile resistance on all pipe sizes and materials





The patented SupaGrip™ sealing support system features a flexible bracket, and combined with the unique grip design SupaGrip™ provides superior tightness and tensile resistance on all pipe dimensions and materials.

Flexible bracket with rigid metal backup of pipe grip and seal

SupaGrip™ provides full support and backup of the gasket even on minimum pipe size within the tolerance range and when used on oval pipes. The flexible bracket is designed to contract and follow the external pipe diameter. As a result, it serves as a solid backup for the gasket and enables full deflection up to 1.5 x PN test pressure.

When tightening the bolts, the bracket segments and radially moving bolts move inwards, securing that the gasket tightens around the pipe and that the grip segments grip in the pipe surface.

Every other grip segment is of gunmetal and hardened stainless steel respectively.



The perforation and finger holes enable simple removal of the centre piece.



Tensile on all pipe materials including AC pipes

Optimum grip and tensile abilities on all pipe materials are secured by means of two different metal grip segments - gunmetal for PE* and PVC pipes and hardened stainless steel for cast iron, ductile iron, steel, stainless steel, GRP**, and AC pipes. The couplings are tested according to EN 14525 with 1.5 X PN + 5 bar.

The grip segments are mounted with pins on the bracket segments to provide maximum durability. The high quality metallic materials safeguard that the sealing will not loose compression over time, and that the coupling stays tensile and tight.

During handling the centre piece of the protection cap protects against the sharp grip segments and prevents dirt from settling inside the coupling. When the centre piece is removed the coupling is ready for installation.

* A support bush in PE pipes is recommended by pipe manufacturers to avoid deformation of the pipe.

** CFW (Continuous Filament Winding) GRP pipes

Designed to optimize handling and installation





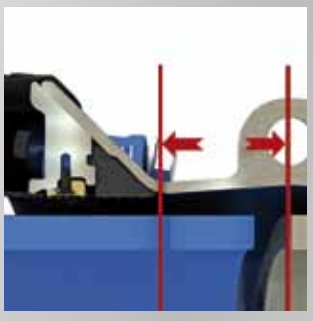

All items with a weight exceeding 10 kilos are designed with a lifting eye in the sleeve securing easy and ergonomically safe handling.

The large insertion depth tolerances allow the pipe to be cut slightly angled.

Save time and money without compromising on safety

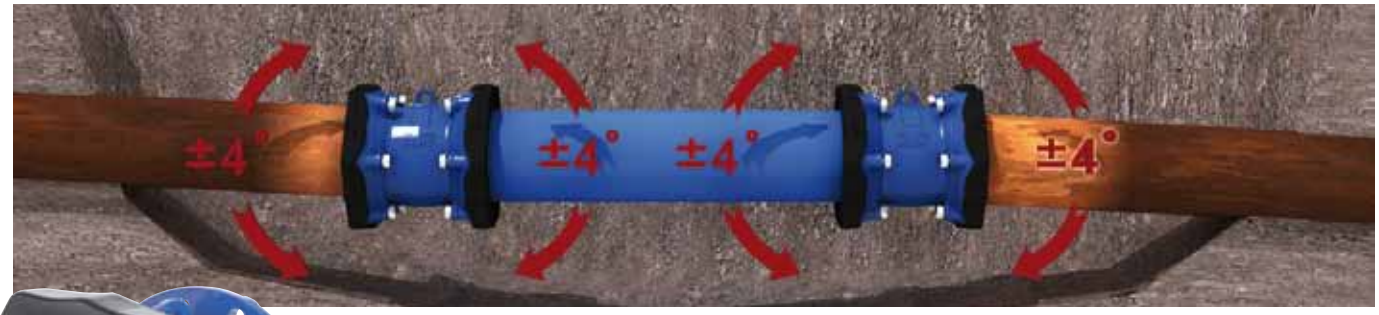

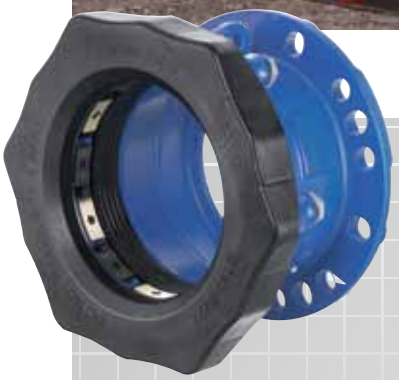

AVK Supa Maxi™ couplings and adaptors offer maximum flexibility, facilitating a secure, fast and easy installation even under difficult conditions.

Reduce time spent on installation

The couplings enable ±4° (in total 8°) deflection on each side up to a maximum pressure of PN 16. The large insertion depth tolerances allow the pipe to be cut slightly angled and the pipe will not move inwards when tightening the bolts. This gives a simple installation without need for precise adjustment. The lifting eye in the sleeve in DN 100-300 enables easy and ergonomically safe handling.

Optimized bolt design

The bolt design is optimized for fast and simple assembly. The number of bolts is kept to an absolute minimum, and they are all standard bolts enabling use of standard tools. The bolts and nuts are anti-friction coated to prevent galling.

The bolts are tightened from the sleeve side to ease assembly when space in the trench is limited, and the threads are protected by the permanent protection cap. The nuts are encaptured in the bracket and covered by the protection cap, so they will not fall off when loosening the bolts. Re-tightening of bolts is not necessary due to the all metal SupaGrip™ sealing support system.

The bolts are all standard flange bolts with anti-friction coating and are tightened on the bolt head to ease assembly.



Permanent protection caps protect the product during handling and installation.



High quality materials ensure a long term safe connection

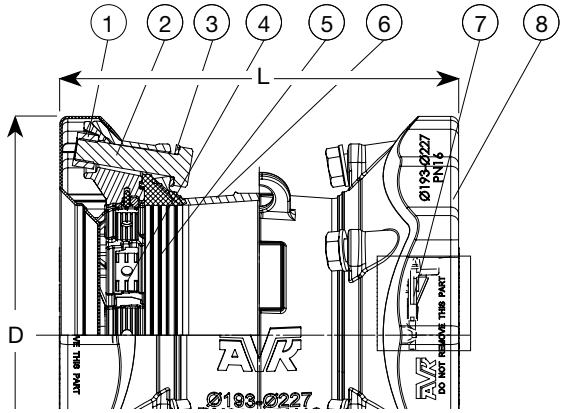

1. Nut 2. Bolt 3. Washer 4. Grip segment
5. Gasket 6. Sleeve 7. Bracket 8. Protection cap

The couplings are designed with sleeves of ductile iron and brackets of cast steel with epoxy coating to DIN 30677-2, GSK approved. They are available with gaskets of EPDM rubber approved by NF and DVGW for drinking water applications or NBR rubber approved by DVGW and Gastec. The bolts and washers are of stainless steel A2 and the nuts are of acid resistant stainless steel A4. Bolts and nuts are anti-friction coated. The grip segments are of gunmetal RG5 and hardened stainless steel, mounted with pins of polyamide. The permanent protection caps of recyclable PE are black for water and sewage applications and yellow for gas applications.

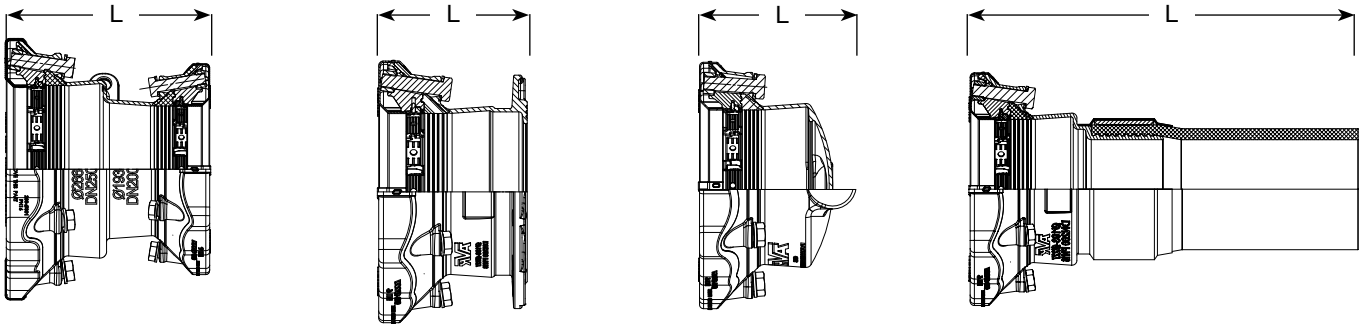

Straight coupling ref. nos*	DN	Pipe ext. mm	D mm	L mm	Weight kilos	Number of bolts x size x length
631-071-006	50	48-71	200	255	6	3 x M14 x 75 mm
631-091-006	65	69-91	226	265	7	3 x M16 x 75 mm
631-106-006	80	82-106	235	268	7.5	3 x M16 x 75 mm
631-133-006	100	104-133	268	289	11	4 x M16 x 75 mm
631-161-006	125	132-161	285	277	13	4 x M16 x 75 mm
631-188-006	150	159-188	340	314	16	4 x M16 x 90 mm
631-227-006	200	193-227	389	354	24	6 x M20 x 100 mm
631-257-006	225	224-257	437	390	30	6 x M20 x 100 mm
631-301-006	250	266-301	476	381	35	6 x M20 x 100 mm
631-356-006	300	314-356	545	438	45	8 x M20 x 100 mm

Step coupling ref. nos*	DN	Pipe ext. mm	Pipe ext. mm	D mm	D large mm	L mm	Weight kilos	Number of bolts x size
632-071-091-006	50-65	48-71	69-91	200	226	294	6.5	3 x M14 - 3 x M16
632-071-106-006	50-80	48-71	82-106	200	235	296	7	3 x M14 - 3 x M16
632-091-106-006	65-80	69-91	82-106	226	235	294	7.5	3 x M16 - 3 x M16
632-106-133-006	80-100	82-106	104-133	235	268	305	10	3 x M16 - 4 x M16
632-133-161-006	100-125	104-133	132-161	268	285	305	12	4 x M16 - 4 x M16
632-133-188-006	100-150	104-133	159-188	268	340	322	14	4 x M16 - 4 x M16
632-161-188-006	125-150	132-161	159-188	285	340	321	14	4 x M16 - 4 x M16
632-188-227-006	150-200	159-188	193-227	340	389	356	21	4 x M16 - 6 x M20
632-188-257-006	150-225	159-188	224-257	340	437	374	27	4 x M16 - 6 x M20
632-227-257-006	200-225	193-227	224-257	389	437	389	32	6 x M20 - 6 x M20
632-227-301-006	200-250	193-227	266-301	389	476	386	32	6 x M20 - 6 x M20
632-257-301-006	225-250	224-257	266-301	437	476	396	36	6 x M20 - 6 x M20
632-301-356-006	250-300	266-301	314-356	476	545	437	42	6 x M20 - 8 x M20

* The ref. nos shown are for water application with NF/DVGW approved EPDM gasket.

A complete range of large tolerance universal and tensile couplings



Flange adaptor ref. nos*	DN	Pipe ext. mm	D mm	L mm	Flange D mm	Weight kilos	Number of bolts x size x length	Drilling
633-071-00006	40/50	48-71	200	197	165	5	3 x M14 x 75 mm	1, 2, 3 4, 5, 8, 9, 10
633-091-00006	50/65	69-91	226	197	185	6	3 x M16 x 75 mm	1, 2, 3 4, 5, 8, 9, 10
633-106-00006	80	82-106	235	198	200	6.5	3 x M16 x 75 mm	1, 2, 3 4, 5, 8, 9, 10, 11
633-133-00006	100	104-133	268	203	229	9	4 x M16 x 75 mm	1, 2, 3 4, 5, 6, 7, 8, 9, 11
633-161-00006	100/125	132-161	285	198	254	10	4 x M16 x 75 mm	1, 2, 3 4, 5, 6, 7, 8, 9, 11
633-188-00006	150	159-188	340	220	285	12	4 x M16 x 90 mm	1, 2, 3, 5, 9, 11
633-227-00006	200	193-227	389	243	343	19	6 x M20 x 100 mm	1, 2, 3, 5, 8, 9, 11
633-257-00006	225/250	224-257	437	245	406	25	6 x M20 x 100 mm	1, 2, 5
633-301-00006	250	266-301	476	254	406	28	6 x M20 x 100 mm	1, 2, 5
633-356-00006	300	314-356	545	282	483	38	8 x M20 x 100 mm	1, 2, 3, 5, 9, 11

Drilling: 1: ISO 7005-2, EN 1092-2: 1997, DIN 2501 (universal drilling) 2: ANSI B16.1 CL 125 3: BS 10 Table A 4: BS10 Table D 5: BS 10 Table E 6: BS 10 Table F 7: BS 10 Table H 8: DIN 1882 9: AS 2129 Table D+E 10: AUG-TAU 11: AS 4087 Fig. B5



End cap ref. nos*	DN	Pipe ext. mm	D mm	L mm	Weight kilos	Number of bolts x size x length
634-071-00016	50	48-71	200	195	4	3 x M14 x 75 mm
634-091-000X6	65	69-91	226	218	5	3 x M16 x 75 mm
634-106-000X6	80	82-106	235	220	5.5	3 x M16 x 75 mm
634-133-000X6	100	104-133	268	230	8	4 x M16 x 75 mm
634-161-000X6	125	132-161	285	220	9	4 x M16 x 75 mm
634-188-000X6	150	159-188	340	238	11	4 x M16 x 90 mm
634-227-000X6	200	193-227	389	259	16	6 x M20 x 100 mm
634-257-000X6	225	224-257	437	277	19	6 x M20 x 100 mm
634-301-000X6	250	266-301	476	272	22	6 x M20 x 100 mm
634-356-000X6	300	314-356	545	300	29	8 x M20 x 100 mm

X: 1 = 1 1/4" BSP thread, in-line, 3 = 2" BSP thread, in-line



Transition coupling ref. nos*	DN	Pipe ext. mm	D mm	L mm	Weight kilos	Number of bolts x size x length
635-071-00X66	50/63	48-71	200	540	4.5	3 x M14 x 75 mm
635-091-00X66	65/75	69-91	226	552	5.6	3 x M16 x 75 mm
635-106-00X66	80/90	82-106	235	543	6	3 x M16 x 75 mm
635-105-00X66	80/110	82-106	235	533	7.5	3 x M16 x 75 mm
635-133-00X66	100/110	104-133	268	547	10	4 x M16 x 75 mm
635-161-00X66	125/160	132-161	285	625	16	4 x M16 x 75 mm
635-188-00X66	150/160	159-188	340	644	18	4 x M16 x 90 mm
635-227-00X66	200/200	193-227	389	648	27	6 x M20 x 100 mm
635-257-00X66	225/250	224-257	437	788	48	6 x M20 x 100 mm
635-301-00X66	250/250	266-301	476	784	49	6 x M20 x 100 mm
635-356-00X66	300/315	314-356	545	784	64	8 x M20 x 100 mm

X: 1 = PE100/PN 16, 2 = PE100/PN 10

* The ref. nos shown are for water application with NF/DVGW approved EPDM gasket.

DN	**Bolt torques Nm** Iron/steel PN 10/PN 16	PE/PVC/GRP** PN 10/PN 16	SS/AC Max. PN 10	**Insertion depth "L"** min mm	max mm	range mm
50	60	60	50	89	126	37
65	60	60	50	89	132	43
80	80	80	60	88	133	45
100	80	80	60	96	144	48
125	100	100	80	88	139	51
150	100	100	80	102	156	54
200	120	120	90	116	177	61
225	120	120	90	117	191	74
250	140	140	110	117	185	68
300	140	140	110	120	213	93

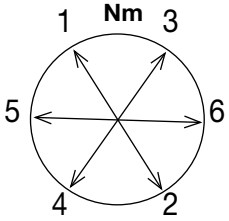

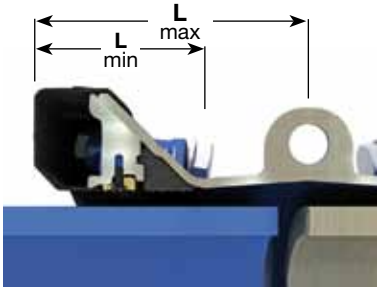

***) For CFW GRP pipes and Bi-PVC pipes max. PN 10, as for stainless steel and AC pipes. AVK gives no warranty for use on AC pipes since the quality of the pipes varies. We recommend to torque bolts only until tightness has been achieved, and to check the installation in open trench.

Supa Maxi™ universal tensile couplings - tight no matter how rough it gets!



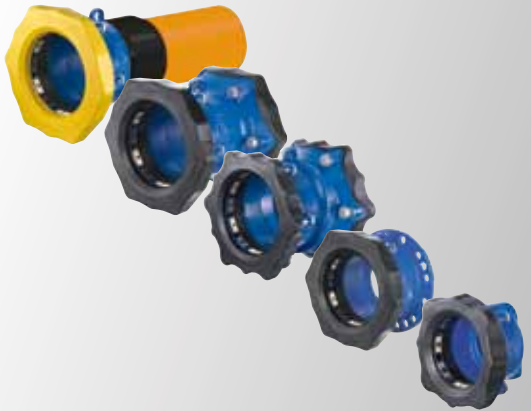

Features summary

- *10 couplings/adaptors cover DN 50-300*
- *Truly universal with full tensile strength on all pipes*
- *SupaGrip™ sealing support system with flexible bracket*
- *PN 16 in all dimensions for water, PN 10 for gas*
- *±4° angular deflection on each side*
- *No inwards movement of pipe*
- *Optimized bolt design with anti-friction coated standard bolts tightened on the bolt head from the sleeve side, without need for re-tightening*
- *Lifting eye and permanent protection caps*
- *EPDM gasket approved for drinking water/NBR approved for gas*
- *Fusion bonded epoxy coating to DIN 30677-2, GSK approved*
- *Temperature range -30°C to +70°C*

Other products in our wide range of flange adaptors and couplings



Series 601
Supa®
straight coupling
for uPVC, AC,
steel, cast iron and
ductile iron pipes
DN 40-400
Ductile iron
PN 16



Series 602
Supa®
stepped coupling
for uPVC, AC,
steel, cast iron and
ductile iron pipes
DN 40-400
Ductile iron
PN 16



Series 603
Supa®
flange adaptor
for uPVC, AC,
steel, cast iron and
ductile iron pipes
Universal drilling
DN 40-400
Ductile iron
PN 16

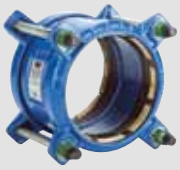

Series 621/10
Supa Plus™
straight coupling
Tensile
For PE and uPVC
pipes
DN 32-300
Ductile iron
PN 16

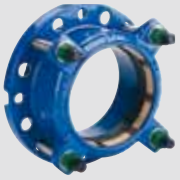

Series 623/10
Supa Plus™
flange adaptor
Tensile
For PE and uPVC
pipes
DN 40-300
Ductile iron
PN 10/16



Series 624/10
Supa Plus™
end cap
Tensile
For PE and uPVC
pipes
DN 40-300
Ductile iron
PN 16

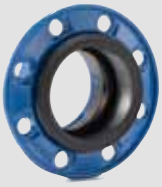

Series 05
Combi-flange for
PE and PVC pipes
Tensile DN 50-300
Non-tensile
DN 50-600 (PVC)
Ductile iron
PN 10/16

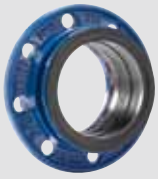

Series 05
Combi-flange for
ductile iron pipes
Tensile DN 50-300
Non-tensile
DN 50-600
Ductile iron
PN 10/16

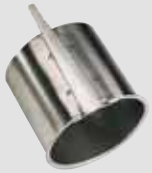

Series 05
Support bush for
PE pipes
DN 50-300
Stainless steel
PN 6.3/10/16



Series 52
Fabricated coup-
ling and flange
adaptor
for AC, steel, cast
iron and ductile
iron pipes
DN 350-1200
Steel
PN 10/16



Series 59/265
Fabricated
dismantling joint
for all pipe
materials
DN 300-1200
Steel
PN 10/16

AVK is certified according to ISO 9001, ISO 14001, and OHSAS 18001









AVK focuses on the environment

AVK recognises the dangers of environmental impact also from a global point of view. AVK products are part of the infrastructure and as such they are an important part of the environment.

Therefore, we constantly work on reducing this impact and seek to identify areas of improvement – not only in our production processes but also in relation to our suppliers.

At our factories and in all processes AVK works systematically on:

- always complying with environmental and work environmental legislation and other relevant requirements from authorities.
- reducing the amount of waste within the company. Where possible we recycle waste materials from production or alternatively apply the most environmentally friendly waste disposal methods.
- minimizing the consumption of energy and raw materials.
- minimizing the use of materials and processes which may be hazardous to the external environment or the work environment.
- informing and educating employees, enabling them to act in accordance with our environmental objectives and thereby contribute to minimising environmental hazard.
- taking environmental factors into consideration when choosing suppliers.
- advising customers on the use and disposal of our products.
- continuous improvement on prevention of pollution.

AVK INTERNATIONAL A/S
Bizonvej 1, Skovby
DK-8464 Galten, Denmark
Tel.: +45 87 54 21 00
Fax: +45 87 54 21 20
E-mail: sales@avk.dk
www.avkvalves.com

2013-01-11
Copyright©AVK Group A/S 2013