AVK TENSILE SOCKET JOINTS FOR PE PIPES

Mounting instruction / Montagevejledning
Einbauanleitung / Instruction de montage



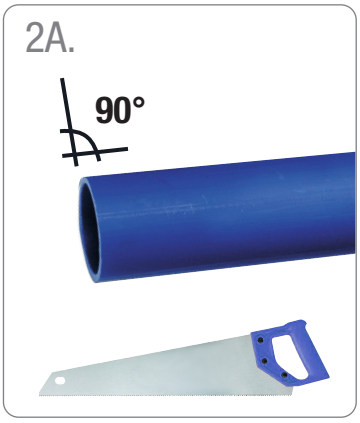

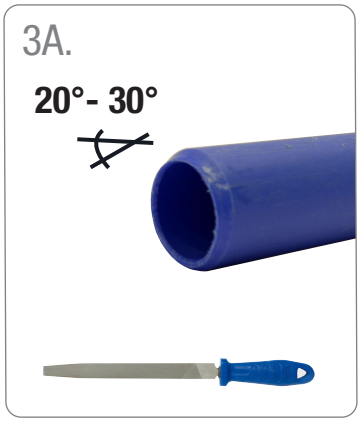



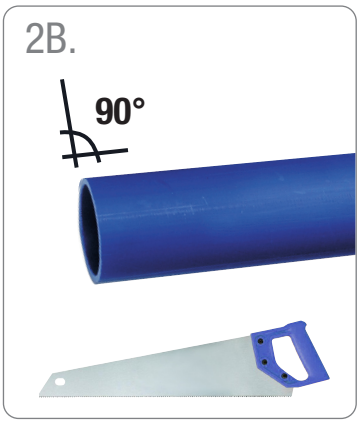

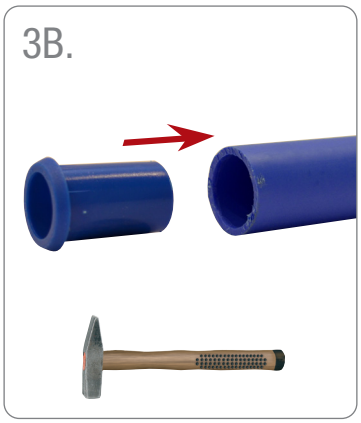

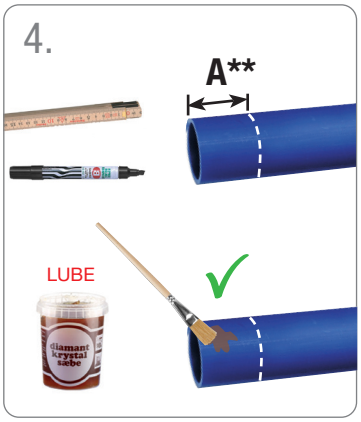

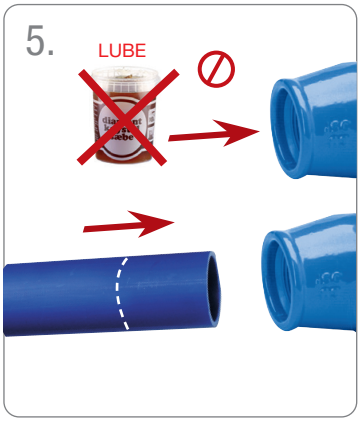

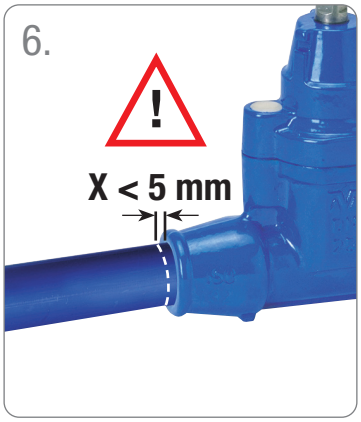

* 05-025-54002
05-032-54002
05-040-54002
05-050-54002
05-063-54002

! Only available in SDR 11

	A
** DN 25 - Ø32 mm =	66 mm
DN 32 - Ø40 mm =	75 mm
DN 40 - Ø50 mm =	91 mm
DN 50 - Ø63 mm =	111 mm

Expect... AVK

COPYRIGHT©AVK GROUP A/S 2021 - AVK INTERNATIONAL A/S, Bizonvej 1, DK-8464 Galten - www.avkvalves.eu

Mounting instruction

Montagevejledning / Einbauanleitung /
Instruction de montage

AVK Tensile socket joints for PE pipes

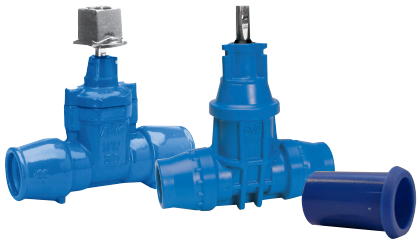

9632500129_rev AB

www.avkvalves.eu