TAPPING SADDLE WITH INTEGRATED CUTTER TYPE SWIC-PVC/PE (SERIES 727/20-4 BOLTS) CUTTER TYPE SWIC-PVC (SERIES 727/21-2 BOLTS)

SERIES 727/2X

Mounting instruction / Montagevejledning
Einbauanleitung / Instruction de montage

1.



2.



3.

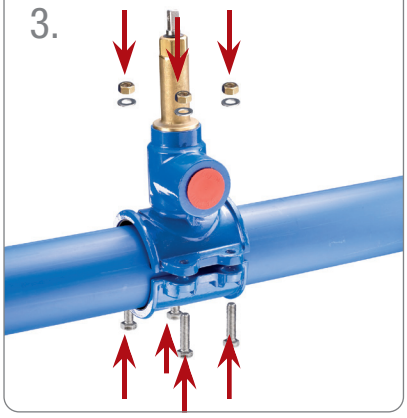

4.

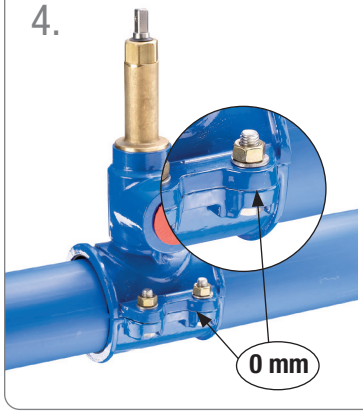

5.

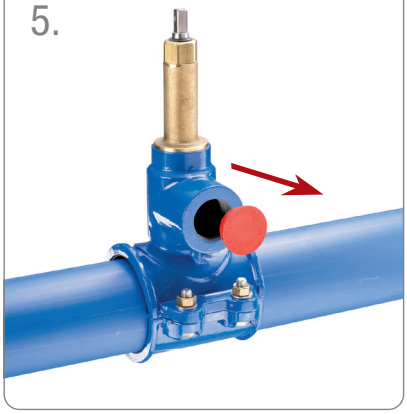

6.

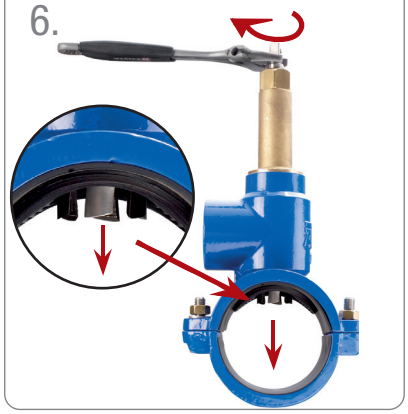

7.

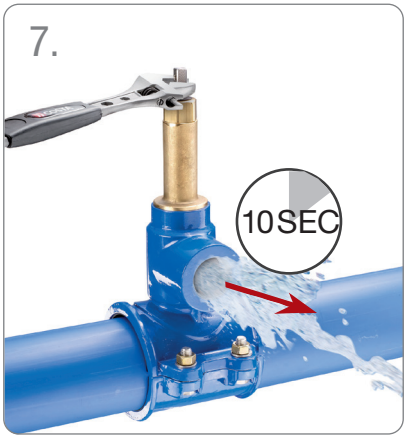

8.



COPYRIGHT©AVK GROUP A/S 2026 - AVK INTERNATIONAL A/S, Bizonvej 1, DK-8464 Galten - www.avkvalves.eu

Tapping saddle series 727/2X

Ref. No.: XXXXXXXXXX



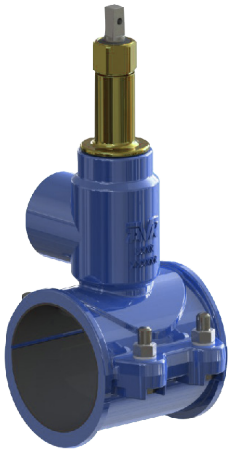

www.avkvalves.eu

COPYRIGHT©AVK GROUP A/S 2026 - AVK INTERNATIONAL A/S, Bizonvej 1, DK-8464 Galten - www.avkvalves.eu